newfron®

USER MANUAL

NF-GT810



Please do not use your device without reading the user manual carefully.

Dear customer

First of all, we would like to thank you for choosing our newfron branded device, which is the pioneer of quality.

In order for your device, which is produced in modern facilities and subjected to meticulous quality control,
to provide you with the best efficiency,
We kindly request you to read this entire manual carefully before using your device and keep it as a reference source.

www.reiselektronik.com.tr

newfron® USER MANUAL

CONTENT

Product Structure 1
GT810 Menu Content 2
Quick Guide 5
Common Faul 5
SD Card 6
How to Connect Wi-Fi 6
Specification 7

Product Structure

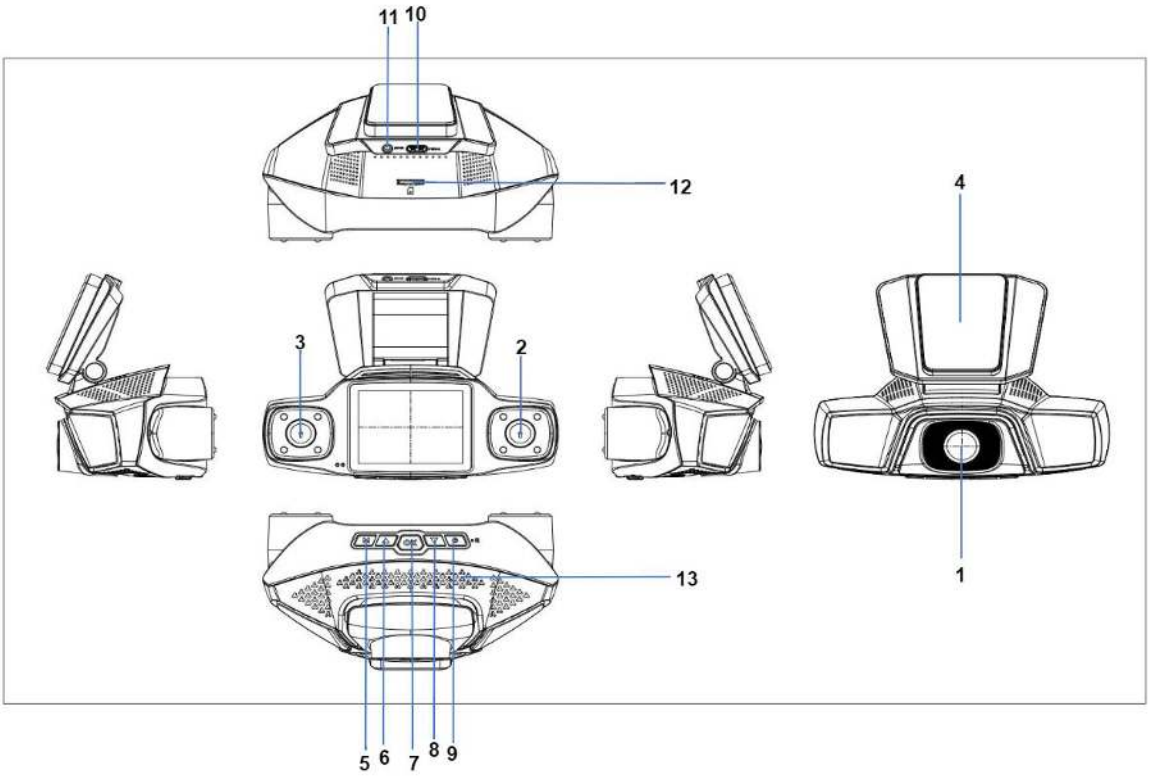

1. Front Camera
2. Right Camera
3. Left Camera
4. 3M Sticker Holder
5. Menu Button
6. Up Button
7. OK Button
8. Down Button
9. On / Off Button
10. Type-C Port
11. Back Camera Port
12. SD Card Port
13. Speaker

GT810 Menu Content

Menu	Setting	Description
Resolution	2K/ 1080P	Set the video resolution.
Loop Recording	1 min / 2 min / 3min	Set the recording duration of video clip.
Time-Lapse	OFF / 1s / 2s / 3s	Set the time of time-lapse.
Time-Lapse Time	OFF / 12H / 24H /48H	Set the interval time of time-lapse.
Record Audio	ON / OFF	ON / OFF record audio.
G-sensor	OFF / Low / Medium / High	Set sensitivity of G-sensor.
Parking Guard	OFF / Low / Medium / High	Set sensitivity of parking guard.
Date Stamp	ON / OFF	ON / OFF date stamp.
GPS Stamp	ON / OFF	ON / OFF GPS stamp.
Back Mirror	OFF / Preview Mirror / Video Mirror / Mirror All	Set OFF / Preview Mirror / Video Mirror / Mirror All of back camera.
Left Mirror	OFF / Preview Mirror / Video Mirror / Mirror All	Set OFF / Preview Mirror / Video Mirror / Mirror All of left camera.
Right Mirror	OFF / Preview Mirror / Video Mirror / Mirror All	Set OFF / Preview Mirror / Video Mirror / Mirror All of right camera.

Menu		Setting	Description
License		N / A	Set car license.
Screen Saver		OFF / 10s / 30s / 60s	Set the screen-off time.
Key Voice		ON / OFF	ON / OFF key voice.
Speaker		ON / Low / Middle / High	Set the level of speaker.
Boot Sound		ON / OFF	ON / OFF boot sound.
Language		English / Chinese / Traditional Chinese/ Japanese / Russian / Thai / Vietnam	Set Language.
Date Time	Date Format	Day/Month/Year	Set date format and time format, and adjust the date and time.
		Year/Month/Day	
		Month/Day/Year	
	Time Format	12H	
		24H	
Summer Time		ON / OFF	It is used in areas where daylight saving time is implemented to automatically adjust the time of the dashcam forward or backward by one hour to be consistent with the local official time.
GPS Test		N / A	Show GPS.
Time Zone		UTC+0:00 ~	Set time zone.

Menu	Setting	Description
	UTC-12:00	
Speed Calibration	-6 / -4 / -2 / +0 / +2 / +4 / +6	Calibrate the speed to make it accurate.
Speed Setting	OFF / Auto	Set the limit of the speed.
Speed Unit	KM/H / MPH	Set the speed unit.
Warning Switch	ON / OFF	ON / OFF warning switch
Wi-Fi APP	ON / OFF	Turn on the Wi-Fi and show the Wi-Fi name and password.
Fill Light	OFF / ON / Auto	When the ambient light is insufficient (such as in underground garage tunnels at night), the LED lights can be automatically or manually turned on to provide supplementary lighting for the scene in front of the camera.
Format	Confirm / Cancel	Format the SD card.
Default	Confirm / Cancel	Default the device, all current settings will be erased.
Version	N / A	Show the version.

Quick Guide

1. InsertaMicroSDcardintothedashcamtostorevideos.Usea high-speedMicroSDcard.

2. Connect the GT810 dashcam to the 3M sticker holder and attach it to the inside of the front windshield.

3. Plug the included Type-C power adapter into the car cigarette lighter socket, connect the Type-C side of the power adapter to the device charging port, and then connect the camera to the device. Route the excess cable along the interior for a better look.

4. Start the car and the camera will automatically turn on. Before going on the road, make sure the camera lens is clean and without lens film, and nothing is blocking the lens.

Common Faults

DVR doesn’t turn on: Check that the device is in the connected with right power.

DVR cannot record: Ensure whether the SD card is full or damaged. Format the SD card or replace the new SD card for trouble shooting.

Unclear picture quality: Check the DVR lens and the

windshield.

SD Card

The system supports up to 256GB Micro SD memory card. In order to maintain smooth video recording, it is recommended to use a high-speed card of Class 10 or above. At the same time, do not plug or unplug the SD card when the system is turned on to avoid damage to the SD card.

SD card is a consumable, please maintain it regularly, for example, format the SD card every 1-2 months.

How to Connect Wi-Fi

Step1: APP download address: Download “Viidure” in APP store and install; Or can scan QR code to download it.

Apple IOS

Android

Step2: Launch GT810 and turn on Wi-Fi APP.

Step3: Open the mobile phone setting page, select WLAN selection.

And connect Wi-Fi: **Newfron*****

Default Password: 12345678

Step4: Open APP and press “Add Camera” to add GT810.

Step5: Connection success.

Specification

CPU	Eeasy230D
Sensor	04B10
Resolution	Front ： real 2K + Left FHD + Right FHD + Rear FHD
Screen	2.4inch
Video Format	TS
Photo Format	JPG
Wi-Fi	Support
Parking Mode	Support
Loop Recording	Support
G-sensor	Support
Accessories	Acc (hardwire kit) , 3M sticker ,rear camera